Rewarding Learning

Centre Number

Candidate Number

General Certificate of Secondary Education
2022

Technology and Design

Unit 1:

Technology and
Design Core Content

[GTY11]

GTY11

WEDNESDAY 25 MAY, AFTERNOON

TIME

1 hour 30 minutes.

INSTRUCTIONS TO CANDIDATES

Write your Centre Number and Candidate Number in the spaces provided at the top of this page.
You must answer the questions in the spaces provided.
Do not write outside the boxed area on each page or on blank pages.
Questions which require drawing or sketching should be completed using an H.B. pencil.
All other questions must be completed using black ink only.
Do not write in pencil or with a gel pen.
Answer **all ten** questions.

INFORMATION FOR CANDIDATES

The total mark for this paper is 100.
Quality of written communication will be assessed in Question **10**.
Figures in brackets printed down the right-hand side of pages indicate the marks awarded to each question or part question.
The Formula sheet is on page 3.

13006.06**R**

BLANK PAGE

DO NOT WRITE ON THIS PAGE

(Questions start on page 4)

Formulae for GCSE Technology and Design

You should use, where appropriate, the formulae given below when answering questions which include calculations.

1 Potential Difference = current × resistance ($V = I \times R$)

2 Series Resistors $R_t = R_1 + R_2 + ... + R_n$

3 Gear ratio of a simple gear train $= \dfrac{\text{number of teeth on driven gear}}{\text{number of teeth on driver gear}}$

4 Velocity ratio $= \dfrac{\text{diameter of driven}}{\text{diameter of driver}}$

[Turn over

1 **Table 1** refers to a number of symbols.

(a) Using the first row as a guide, complete the table.

Table 1

Sketch of Symbol	Type of Symbol	Name of Symbol
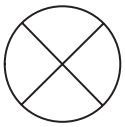	Electronic	Bulb
	Electronic	Motor
		Single Cell (Battery)

[7]

(b) Printed Circuit Boards (PCBs) consist of a plastic board and a layer of copper.

What are printed circuit boards used for?

_____ [1]

What purpose does the plastic board serve?

_____ [1]

Why is copper used in a PCB?

_____ [1]

2 **(a)** **Fig. 1** shows a wooden puzzle made from plywood. The puzzle is designed for young children. Six different shapes have to be fitted correctly by the child.
A manufacturer has decided to make a one-off/prototype to test before going into production.
The square shape is removed to show how the six shapes fit into the puzzle.

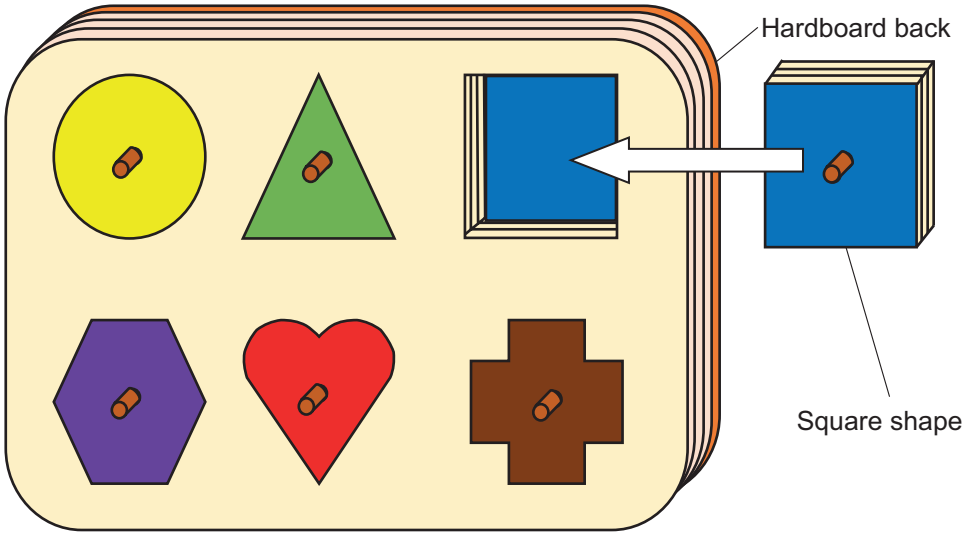

Source: Principal Examiner

Fig. 1

(i) Is plywood a hardwood, softwood or manufactured board?

_____ [1]

(ii) What makes plywood such a strong material?

_____

_____ [2]

(b) **Fig. 2** shows the front view of the puzzle with the hardboard back removed. Outline **three** stages of how the square hole may be cut out using hand tools and/or manually operated machines.

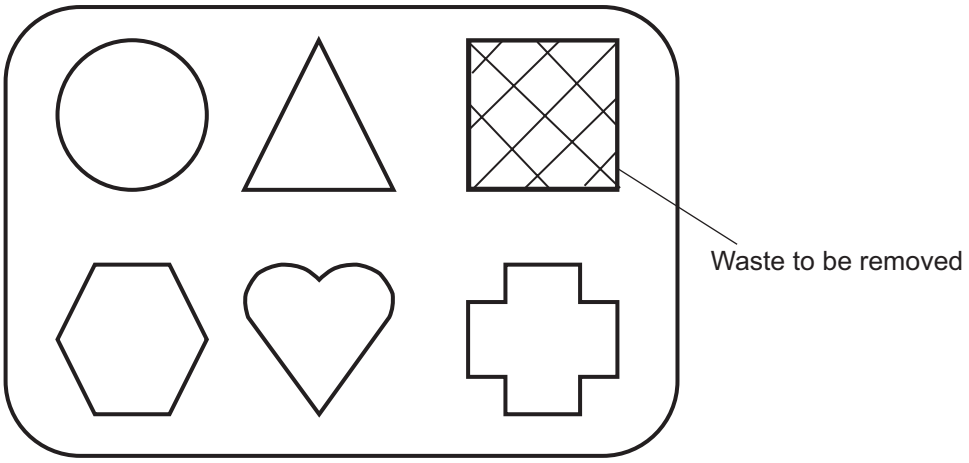

Source: Principal Examiner

Fig. 2

1. _____

_____ [1]

2. _____

_____ [1]

3. _____

_____ [1]

(c) The manufacturer has decided to use computer-aided design (CAD) and computer-aided manufacture (CAM) to make a large quantity of these puzzles. Outline **three** main steps in this process.

1. _____

_____ [1]

2. _____

_____ [1]

3. _____

_____ [1]

BLANK PAGE

DO NOT WRITE ON THIS PAGE

(Questions continue overleaf)

3 **(a)** Complete **Table 2** by identifying the mechanical symbol shown.

Table 2

Mechanical Symbol	Name
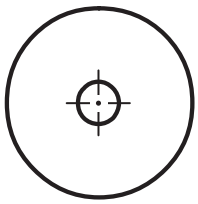	
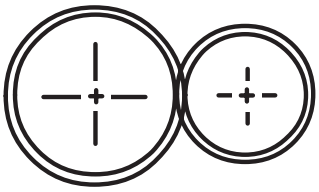	

[2]

(b) **Fig. 3** below shows the mechanism for winding cable on to a drum. The drum is turned by a gear system using the handle as shown.

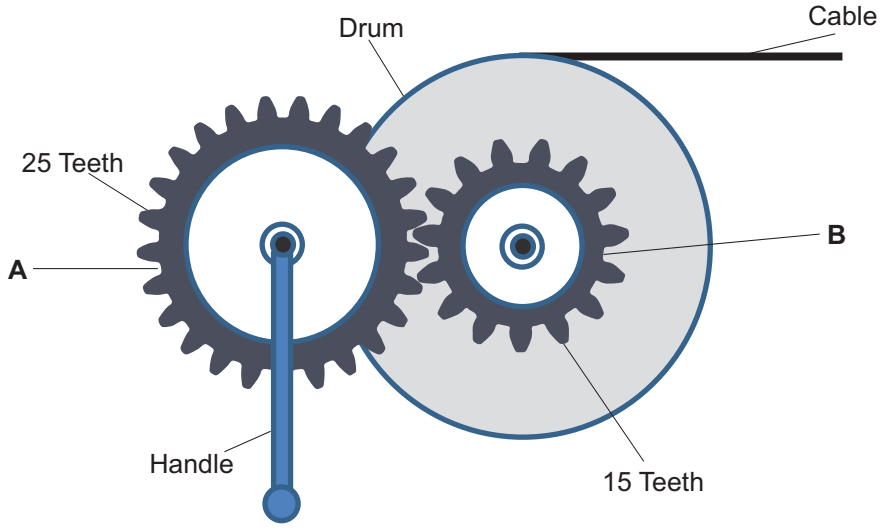

Source: Principal Examiner

Fig. 3

(i) Mark on **Fig. 3** the direction in which the handle must turn in order to wind the cable on to the drum. [1]

(ii) Complete the following by placing a tick (✓) in the correct box.

In **Fig. 3** gear wheel **A** will rotate at:

a lower speed than Gear **B** ☐

a higher speed than Gear **B** ☐ [1]

(iii) Complete the following by placing a tick (✓) in the correct box.

In **Fig. 3** gear wheel **A** is the:

Driver Gear ☐

Driven Gear ☐ [1]

[Turn over

(c) Explain why the gear system for the cable winding machine requires lubrication.

_____

_____ [1]

(d) The mechanism in **Fig. 3** has been modified as shown in **Fig. 4**.

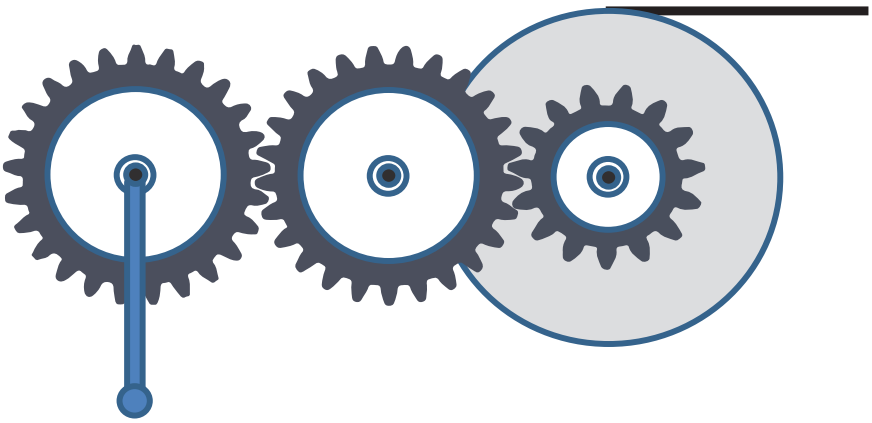

Source: Principal Examiner

Fig. 4

(i) What name is given to the middle gear?

_____ [1]

(ii) What effect will the middle gear have on the direction of rotation of the drum?

_____ [1]

BLANK PAGE

DO NOT WRITE ON THIS PAGE

(Questions continue overleaf)

4 **(a)** A pneumatic circuit is shown in **Fig. 5**.

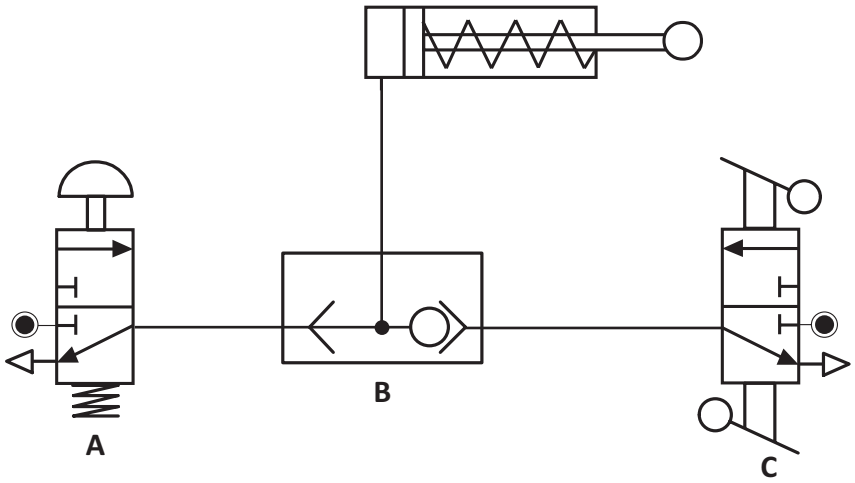

Fig. 5

(i) Name the component labelled **B** in **Fig. 5**.

_____ [1]

(ii) Valve **A** can be used to control the circuit in **Fig. 5**.

Explain what would happen if valve **A** was pushed for a brief moment.

_____

_____ [2]

(iii) Explain what would happen if valve **A** was pushed and held for a period of time before being released.

_____

_____ [2]

(b) **(i)** Outline the other way shown in **Fig. 5** to control the circuit.

_____ [1]

(ii) What is the essential difference between the two methods of controlling the circuit?

_____

_____

_____

_____ [2]

[Turn over

5 **(a)** **(i)** Name the tool shown in **Fig. 6** and explain what it is used for.

Source: Chief Examiner

Fig. 6

Name _____

Use _____

_____

_____ [3]

(ii) What is the purpose of the brass strip on the tool shown in **Fig. 6**?

_____

_____ [1]

(b) Two pieces of wood shown in **Fig. 7** are to be joined together using wood screws. Three wood screws are to be inserted at different points on the line shown along the centre of the top piece of wood.

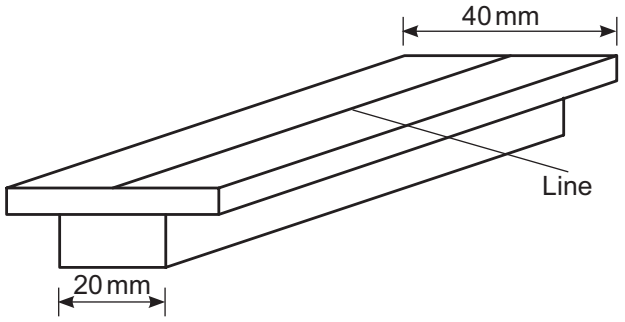

Source: Chief Examiner

Fig. 7

(i) Describe how to produce this centre line accurately.

_____

_____

_____ [2]

(ii) Name the type of wood screws that should be used if they are to sit flush along the top of the wood.

_____ [1]

(iii) Describe how to prepare the wood to enable the first screw to sit flush along the centre line. It should be fitted 15 mm from one end of the wood.

_____

_____

_____

_____

_____

_____ [4]

[Turn over

6 **(a)** Name the electronic component represented by its electronic symbol shown in **Fig. 8** below and identify each of the three connecting points labelled **X**, **Y** and **Z**.

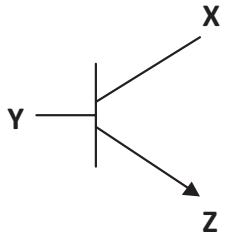

Fig. 8

Name of Component _____ [1]

Point **X** _____ [1]

Point **Y** _____ [1]

Point **Z** _____ [1]

(b) The component symbol shown in **Fig. 8** is used in the circuit below. Explain the operation of this circuit ensuring that the name and purpose of each component is included in your explanation.

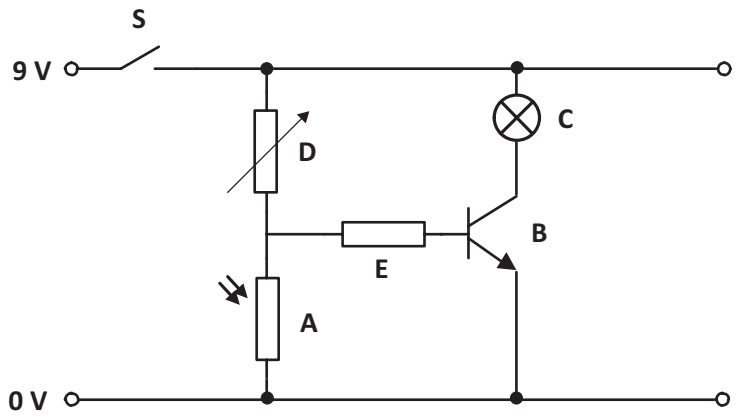

Fig. 9

[9]

7 **Fig. 10** shows a model of a mobile phone display.

Complete the flow chart in **Fig. 11** to illustrate the operation of the mobile phone display.

If the display switch is turned on, the cylinder will start to rotate. Ten seconds after the display switch is turned on, three LEDs red, green and yellow will light up in sequence with a four second interval between them. Thirty seconds after the display switch is turned on, all the LEDs will turn off and the cylinder will stop rotating. The system will continue until the display switch is turned off.

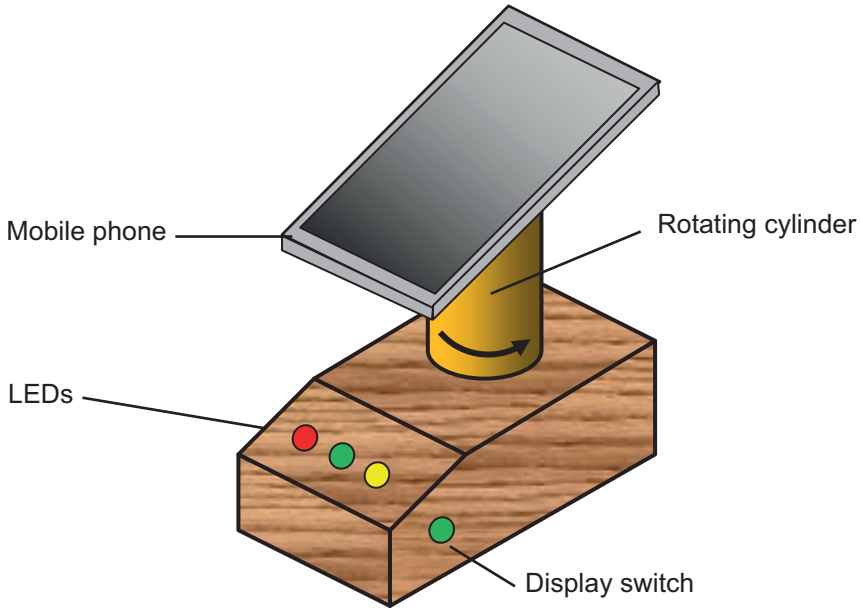

Source: Principal Examiner

Fig. 10

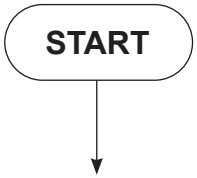

[11]

Fig. 11

[Turn over

8 Mild steel is used in many applications.

(i) Is mild steel a pure metal **or** an alloy?

_____ [1]

(ii) Complete **Table 3** by selecting from the list below, the appropriate use for the three types of steel shown.

List of uses:

- Cutlery
- Cutting tools
- Car bodies

Table 3

Type of Steel	Use
Mild steel	
Stainless steel	
High carbon steel	

[3]

(iii) What advantage has stainless steel compared to mild steel?

_____ [1]

(iv) In the heat treatment of steel explain the difference between hardening and tempering.

_____

_____

_____

_____ [4]

BLANK PAGE

DO NOT WRITE ON THIS PAGE

(Questions continue overleaf)

9 **(a)** Name the pneumatic symbols shown in **A** and **B** below.

A _____ **B** _____ [2]

(b) **Fig. 12** shows a pneumatic circuit for opening and closing a fire door in a warehouse.

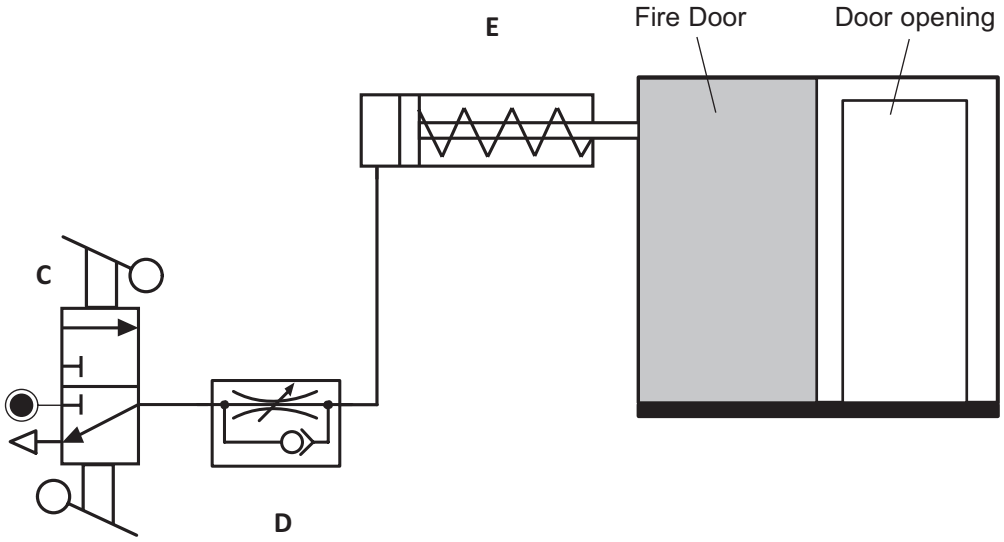

Source: Principal Examiner

Fig. 12

(i) Name in full the component labelled **C** in the circuit which activates the outstroke and instroke of the piston rod.

_____ [2]

(ii) In which direction does the component **D** control the speed of the piston in this circuit? Tick (✓) the correct answer.

Instroke ☐ Outstroke ☐ [1]

(iii) Explain how the component **C** controls the operation of the sliding door.

_____

_____ [2]

(iv) Give **one** reason why the speed of the piston rod is controlled.

_____

_____ [1]

(c) The warehouse owner has decided to control the speed of the fire door when opening and closing. Complete **Fig. 13** below to show how you would do this.

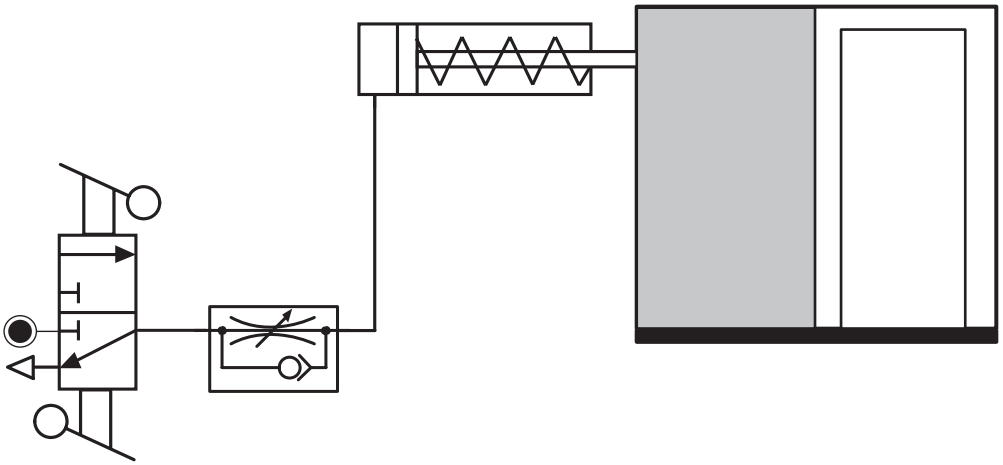

Source: Principal Examiner

Fig. 13

[3]

10 A 300 mm diameter circular cutting (chopping) board, for use in a kitchen, is to be made from a square piece of oak 400 × 400 × 20 mm. A 25 mm diameter hole is to be located with its centre 40 mm from the edge of the board. To avoid a sharp edge, a small radius (curved edge) should be made on the top and bottom of the board.

Describe the manufacturing processes of marking out, drilling, cutting, shaping and finishing of the cutting board. The description should include tools, equipment and safety precautions directly related to the processes.

Quality of written communication will be assessed in this question.

[10]

THIS IS THE END OF THE QUESTION PAPER

Sources:

Q1a....Hazard symbol © Getty Images

DO NOT WRITE ON THIS PAGE

For Examiner's use only	
Question Number	**Marks**
1	
2	
3	
4	
5	
6	
7	
8	
9	
10	
Total Marks	

Examiner Number

Permission to reproduce all copyright material has been applied for.
In some cases, efforts to contact copyright holders may have been unsuccessful and CCEA will be happy to rectify any omissions of acknowledgement in future if notified.